RoHS 2015/863/EU REACH compliant Conflict minerals free

GEYER quartz technology

GEYER KXO-V60 Features and Applications:

- LVDS Oscillator with supply voltage range +1.8 V ~ +3.6 V
- Package size: 2.5 x 2.0 x 1.0 mm, 6 pad footprint
- Frequency range: 10.0 ~ 312.5 MHz
- Wide temperature and low phase noise
- Moisture Sensitivity Level, MSL Level 1
- Recommended for Telecommunication, Network equipment, Industrial, etc
- For further requirements, please contact us

LVDS Clock Oscillator SMD-version +1.8 / +2.5 / +3.3 V

part no.		12.xxxxx
model		KXO-V60
frequency range		10.0 ~ 312.5 MHz
frequency stability incl. temperature stability, input voltage and load stability, aging.		±20, ±25, ±50 ppm over -20°C ~ +70°C / -40°C ~ +85°C (referred to +25°C) ±50, ±100 ppm over -55°C ~ +125°C (referred to +25°C)
output load		100 Ohm & 5 pF LVDS
operating temperature		-20° ~ +70°C ; -40° ~ +85°C (=KXO-V60T) -55° ~ +125°C (=KXO-V60F)
storage temperature		-55° ~ +125°C
supply voltage		+1.8 V DC ±5 %, +2.5 V DC ±5 % or +3.3 V DC ±5 %
output voltage level		V_{OL}: 0.9 V min. / V_{OH}: 1.6 V max.
differential output voltage		0.247V ~ 0.454V, 0.350V Typ
LVDS offset output voltage		1.125 V ~ 1.375 V, 1.250V typ.
supply current max.		35 mA
start-up time max.		5 ms
symmetry		45 % / 55 % at ½ V_{DD} level or 40 % / 60 % at ½ V_{DD}
rise time (Tr)/ fall time (Tf) max.		600 ps (Output level 20 % ~ 80 % of waveform)
disable delay/enable delay time max.		200 ns/ 4 ms
Pin 1 function	Enable input voltage min.	70 % V_{DD} or NC
	Disable input voltage max.	30 % V_{DD}
phase jitter (12 kHz ~ 20 MHz) typ.		55fs at 156.25MHz (3.3V)
phase noise typ.		-85 dBc/Hz at 10 Hz -114 dBc/Hz at 100 Hz -142 dBc/Hz at 1 kHz -152 dBc/Hz at 10 kHz -157 dBc/Hz at 100 kHz -160 dBc/Hz at 1 MHz
contents of reel		1000 pcs.

RoHS 2015/863/EU REACH compliant Conflict minerals free

GEYER quartz technology

Dimensions (mm):

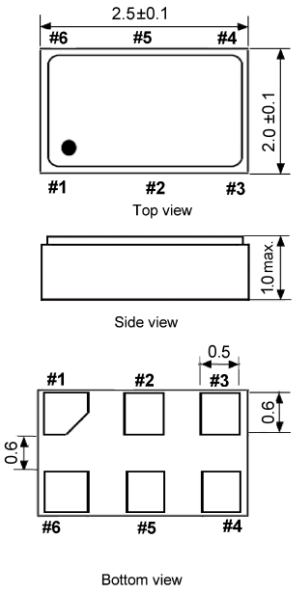

Suggested soldering pad:

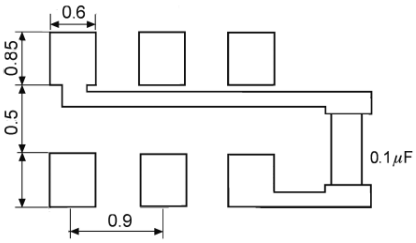

Note:
Capacitors of value 0,1 µF and 10 µF between V_{DD} and GND are recommended.

PIN	Connection
1	Tri-state or NC
2	NC
3	GND
4	Output
5	C-Output
6	V_{DD}

Test circuit:

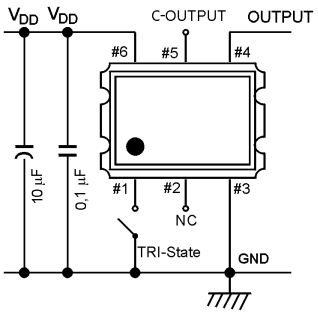

Reflow soldering condition:

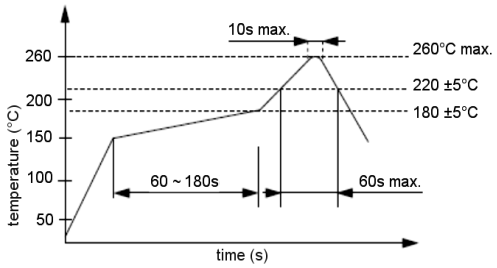

Tape specification:

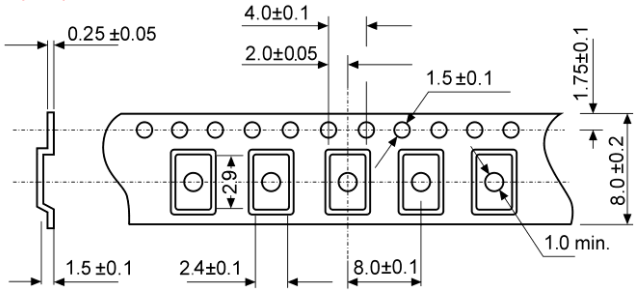

reel diameter 178 mm

GEYER Electronic GmbH Behringstraße 6 D-82152 Planegg / München
Tel. +49 89 546868-0 quartz@geyer-electronic.de www.geyer-electronic.de